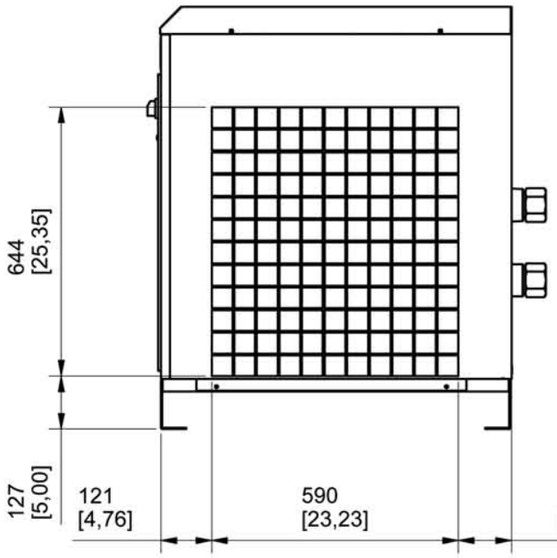

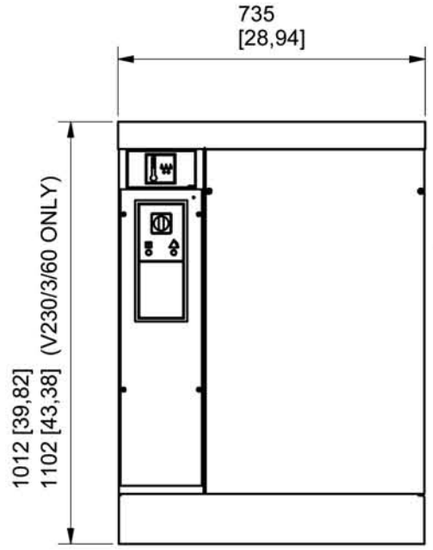

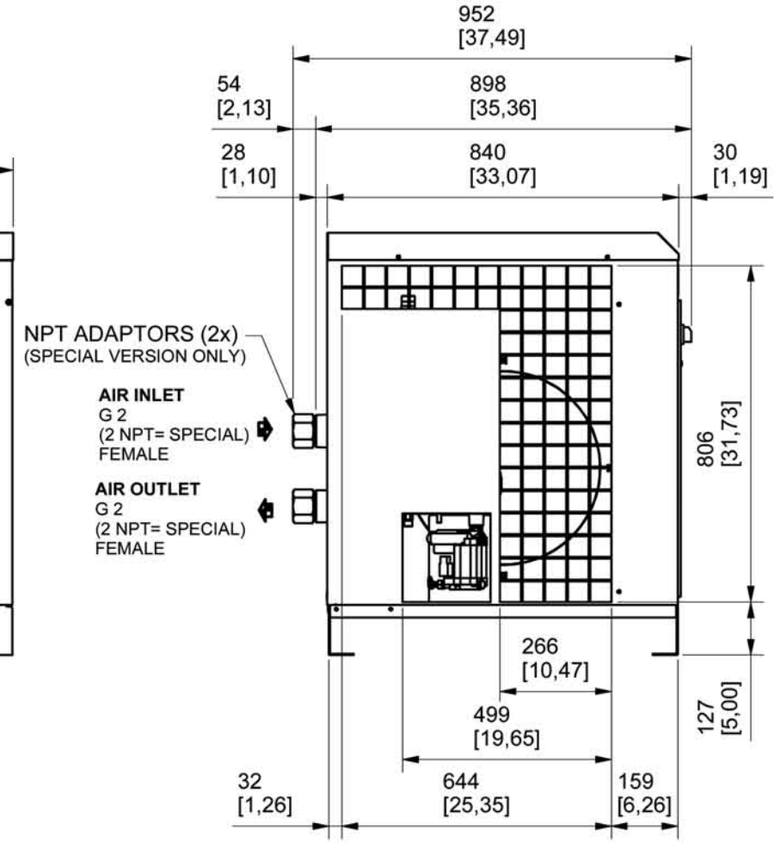

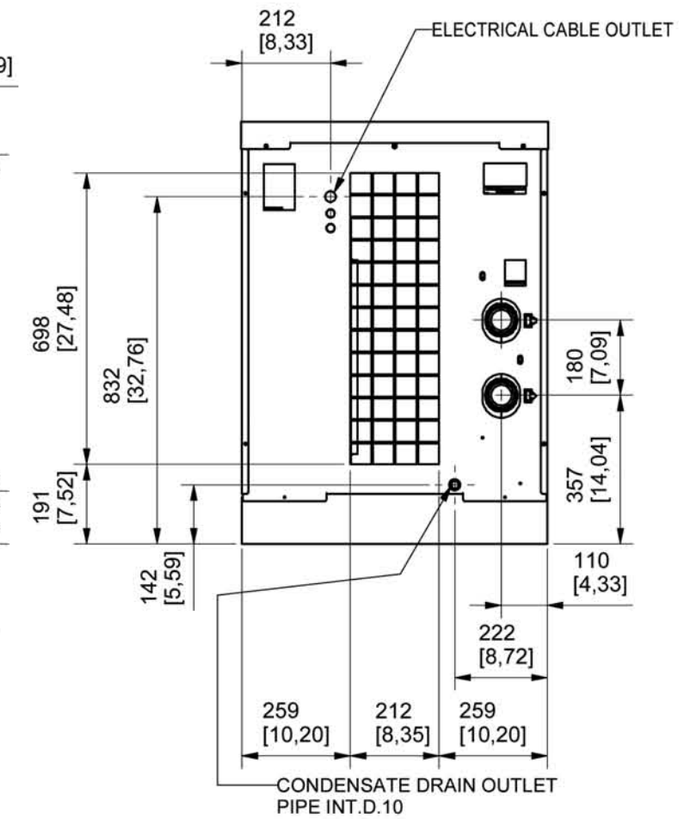

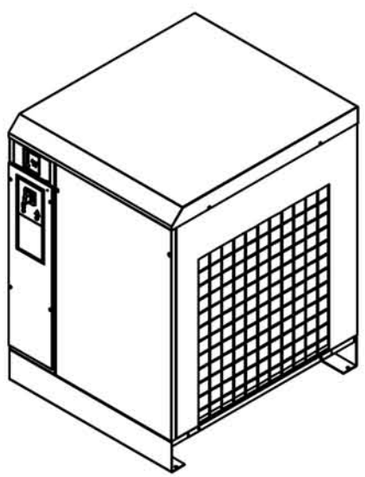

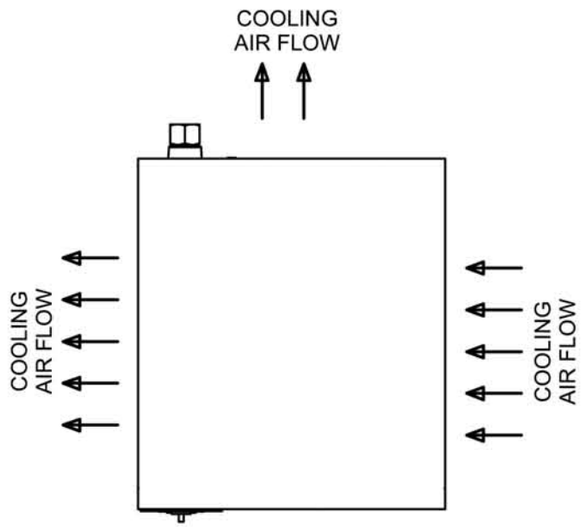

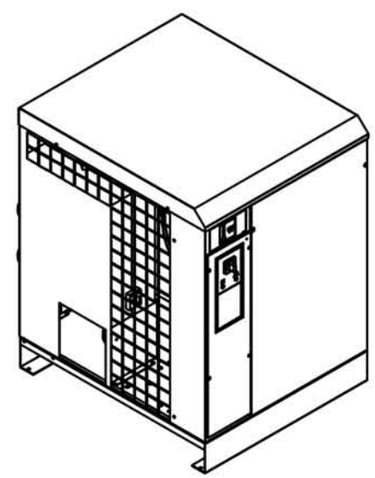

THIS MATERIAL IS CONFIDENTIAL AND CONTAINS PROPRIETARY INFORMATION AND OTHER RIGHTS WHICH ARE THE SOLE AND EXCLUSIVE PROPERTY OF QUINCY COMPRESSOR. POSSESSION OF THIS MATERIAL DOES NOT CONVEY OR TRANSFER ANY RIGHTS THERETO AND ANY REPRODUCTION, USE, COPYING, OR DISCLOSURE TO OTHERS IS FORBIDDEN WITHOUT THE PRIOR WRITTEN CONSENT OF AN OFFICER OF QUINCY COMPRESSOR.

DO NOT SCALE PRINT

THIRD ANGLE PROJECTION

FIRST USED ON: QPNC

UNLESS OTHERWISE SPECIFIED

TOLERANCE ON ANGLES ±1° 30'
TOLERANCE ON TWO PLACE DIM'S ±.03
TOLERANCE ON THREE PLACE DIM'S ±.010
FINISH ON MACHINED SURFACES √

	NAME	DATE
DR		
CK		
APPD		

MATL: NOTED

FINISH: NOTED

DATE ISSUED: 7-1-2010

APPD BY:

Quincy Compressor
3501 Wismann Ln.
Quincy, Illinois 62301

TITLE: QPNC 300-600

SIZE: D | DWG NO: 2202959600 | REV: A

SCALE: .50=1 | WT | SHEET 1 OF 1