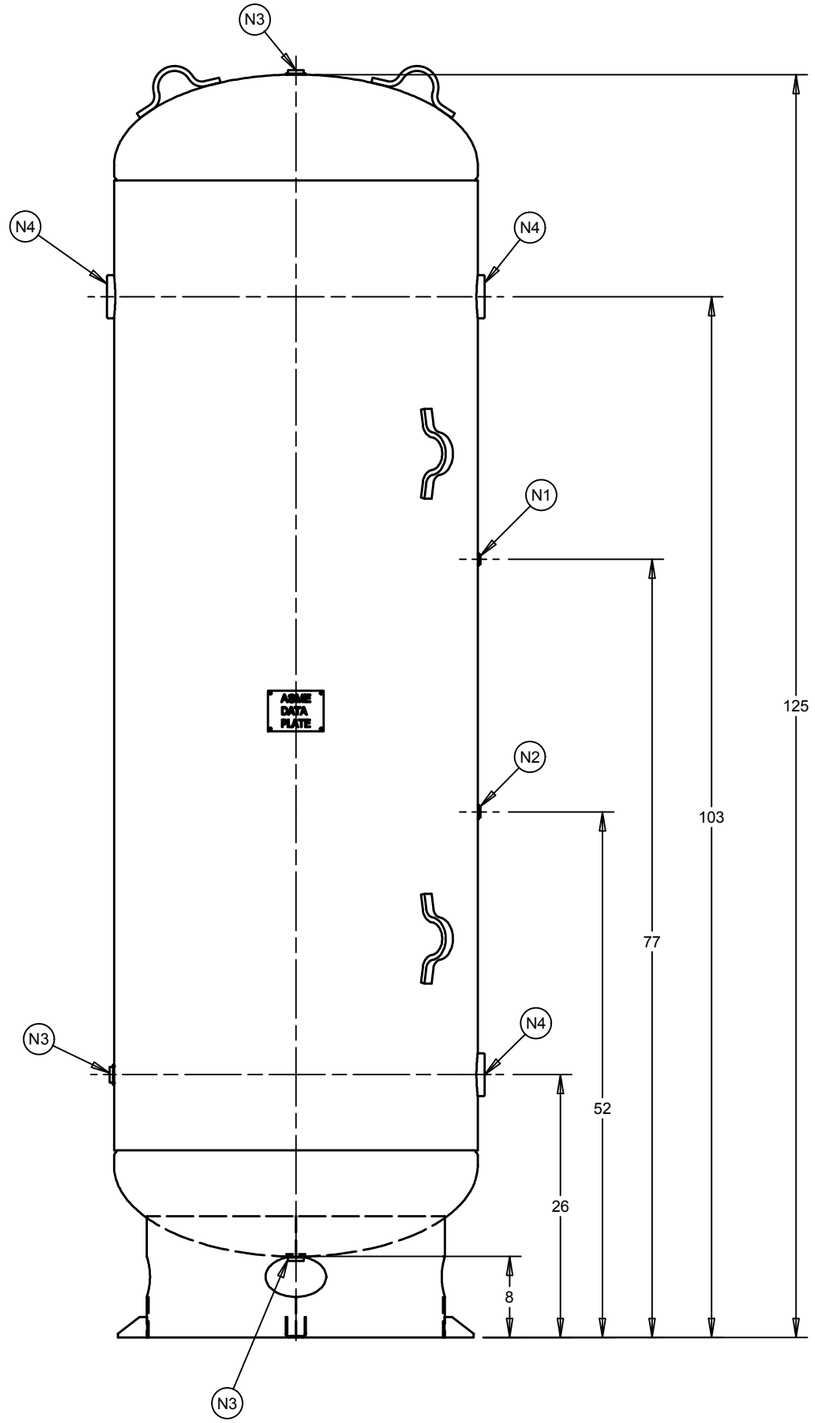

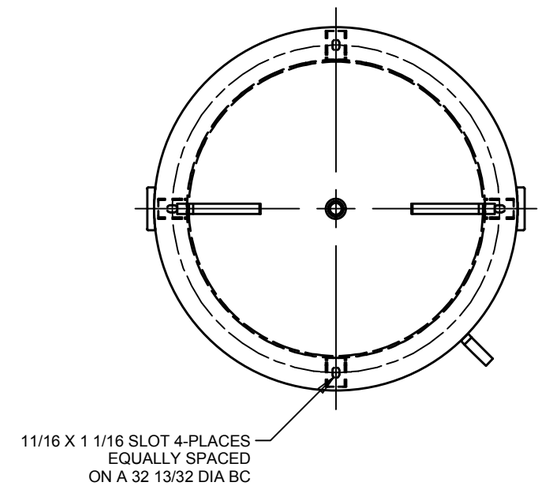

TOP VIEW

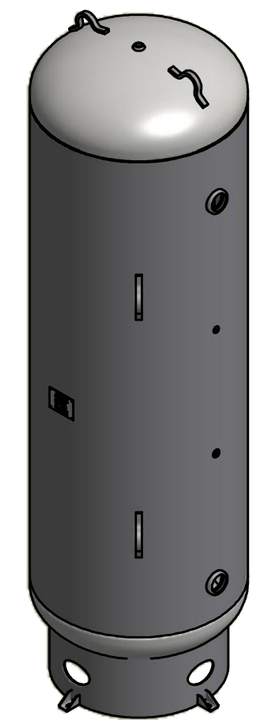

NOZZLE CHART	
NOZZLE ID	NPT SIZE
N1	1/4
N2	1/2
N3	1
N4	3

DESIGN INFORMATION	
SPECIFICATION	VALUE
DIAMETER O.D./I.D.	36 O.D.
MAWP	200 PSI AT 400°F
MDMT	-20°F AT 200 PSI
CAPACITY	APPROX 500 GALLONS
SHIPPING WEIGHT	1135 LBS
CRN	L4040.5678901234T

(BUILT IN ACCORDANCE WITH LATEST EDITION OF SECTION VIII DIV 1 ASME CODE)

THIS DRAWING & SPECIFICATIONS ARE PROPERTY OF SPVG AND MAY NOT BE COPIED, REPRODUCED, OR USED IN WHOLE OR PART, AS A BASIS FOR DESIGN MANUFACTURE OR SALE WITHOUT PRIOR PERMISSION FROM SPVG.

REV	DESCRIPTION	BY	DATE
A19	ISSUED		

TITLE: VERTICAL AIR RECEIVER

CUSTOMER: STOCK

TYPE: ASME

SAMUEL 1655 PRESSURE VESSEL GROUP

DRAWN	CHECKED	DRAWING NO	REV
KAT 9/12/2016	DMM 10/7/2016	A10130	A19

SIZE: B

SHEET 1 OF 1