NOZZLE CHART	
NOZZLE ID	NPT SIZE
N1	1/4
N2	1/2
N3	3/4
N4	1
N5	2

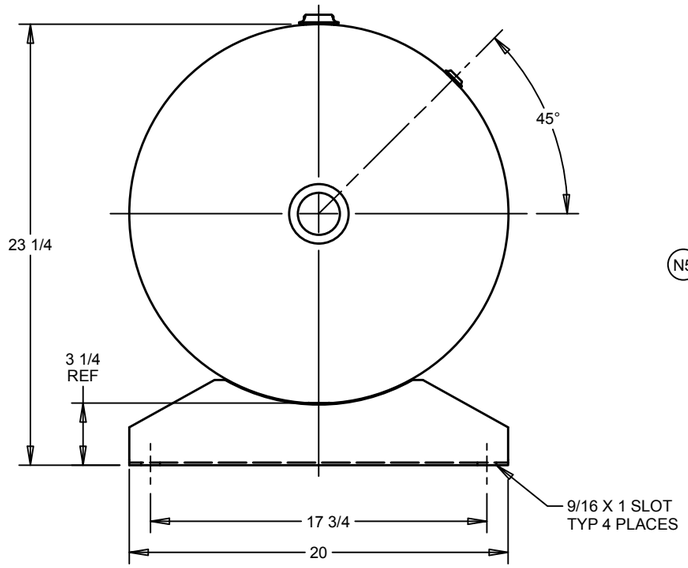

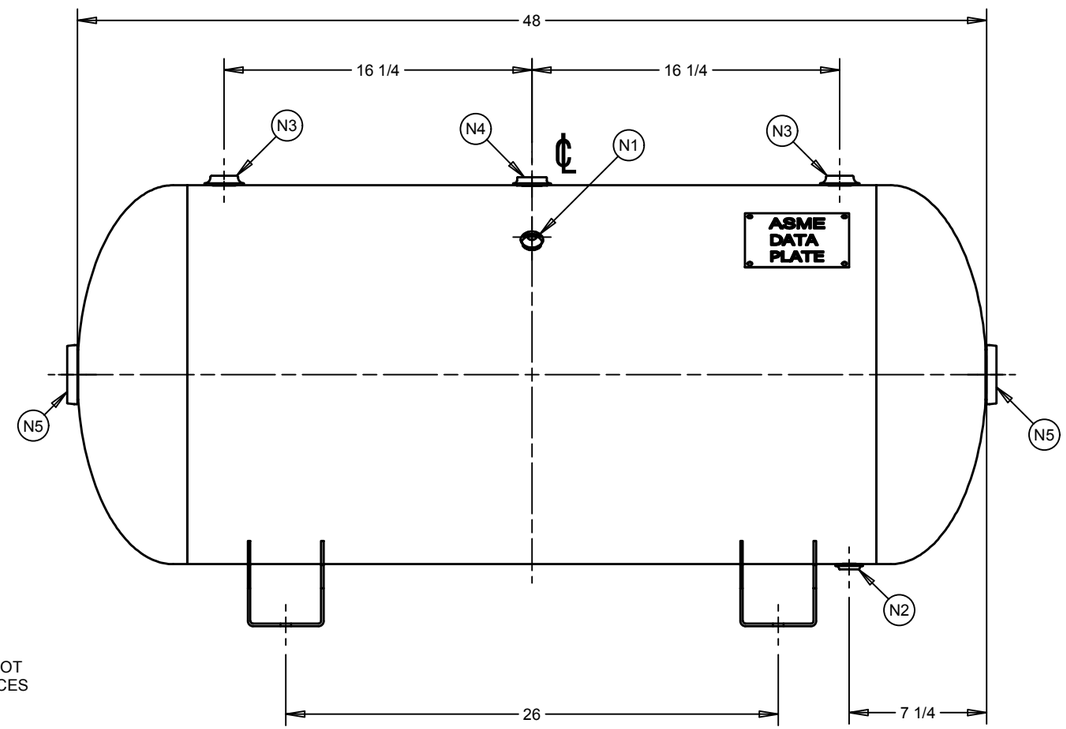

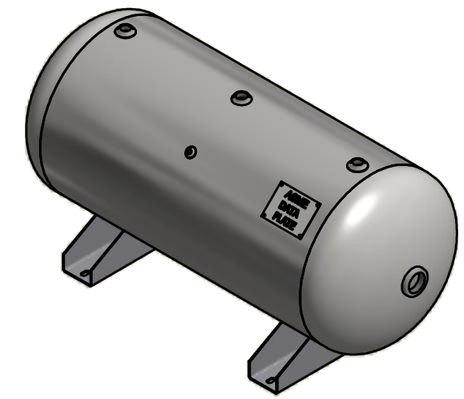

DESIGN INFORMATION	
SPECIFICATION	VALUE
DIAMETER O.D./I.D.	20 O.D.
MAWP	200 PSI AT 400°F
MDMT	-20°F AT 200 PSI
CAPACITY	APPROX 60 GALLONS
SHIPPING WEIGHT	162 LBS
CRN	M3329.5C

(BUILT IN ACCORDANCE WITH LATEST EDITION OF SECTION VIII DIV 1 ASME CODE)

THIS DRAWING & SPECIFICATIONS ARE PROPERTY OF SPVG AND MAY NOT BE COPIED, REPRODUCED, OR USED IN WHOLE OR PART, AS A BASIS FOR DESIGN MANUFACTURE OR SALE WITHOUT PRIOR PERMISSION FROM SPVG.

REV	DESCRIPTION	BY	DATE
A9	ISSUED		

TITLE
HORIZONTAL AIR RECEIVER

SAMUEL 1865 PRESSURE VESSEL GROUP

CUSTOMER
STOCK

TYPE
ASME

DRAWN	CHECKED	DRAWING NO	REV
KAT 10/6/2016	DMM 10/18/2016	A10029	A9

SIZE: B

SHEET 1 OF 1