DRG. NUMBER	DRG SIZE	SHEET
A3- 42-1435		
REV A	DRG SIZE A3	SHEET 1

THIS DRAWING AND ANY INFORMATION OR DESCRIPTIVE MATTER SET OUT HERON ARE THE CONFIDENTIAL AND COPYRIGHT PROPERTY OF ATLAS COPCO, AND MUST NOT BE DISCLOSED, LOANED, COPIED OR USED FOR MANUFACTURING, TENDERING OR FOR ANY OTHER PURPOSE WITHOUT THEIR WRITTEN PERMISSION.
©2019.

DO NOT SCALE DRG / IF IN DOUBT ASK!
REMOVE ALL SHARP EDGES
ALL DIMENSIONS IN mm

1ST ANGLE PROJECTION

UNLESS STATED GEOMETRICAL TOLERANCE TO BE 50% OF LINEAR TOLERANCE.
REFER TO B.S. 8888:2000

GENERAL TOLERANCE SYSTEM - UNLESS OTHERWISE STATED

0 NOM	= ± 1.00 mm	0.0	= ± 0.25 mm	ANGULAR :-	
0	= ± 0.50 mm	0.00	= ± 0.10 mm	0.0°	= ± 0.50 °

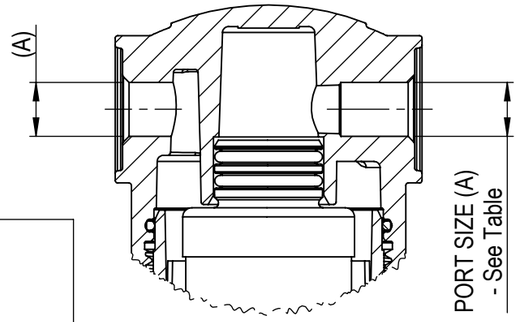

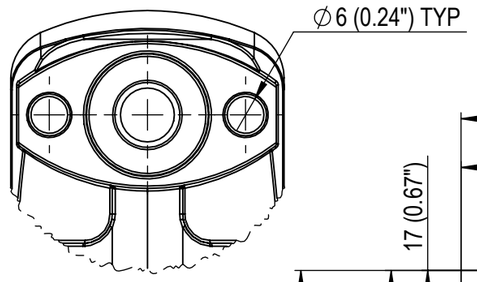

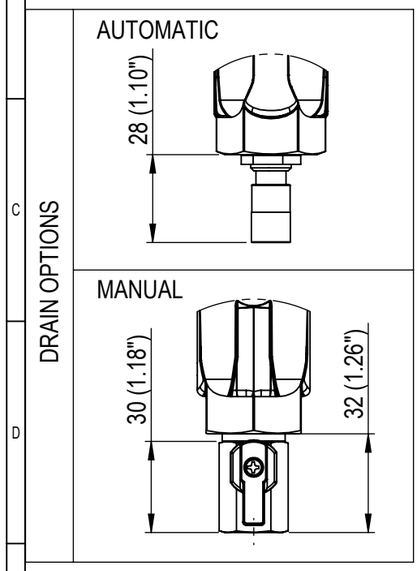

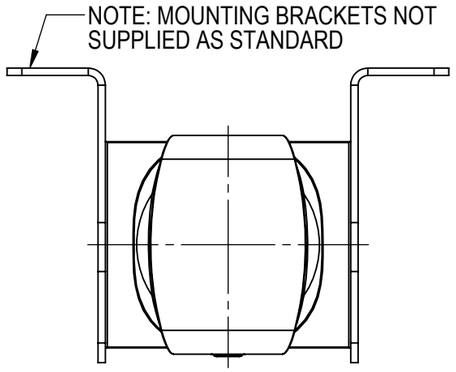

PLAN VIEW

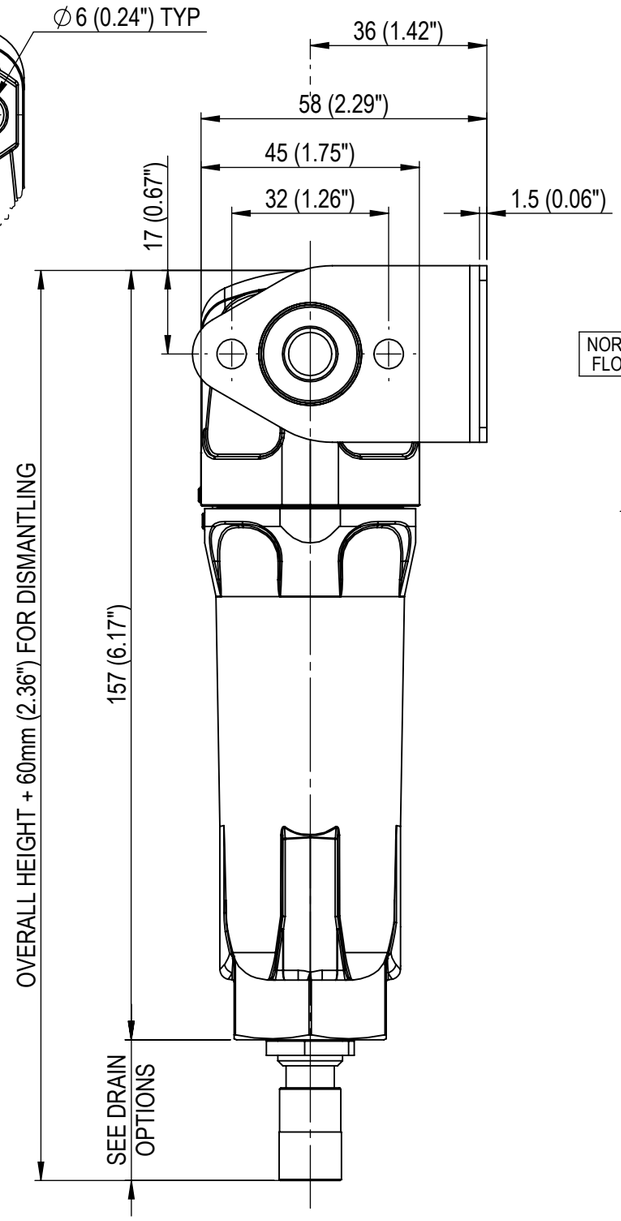

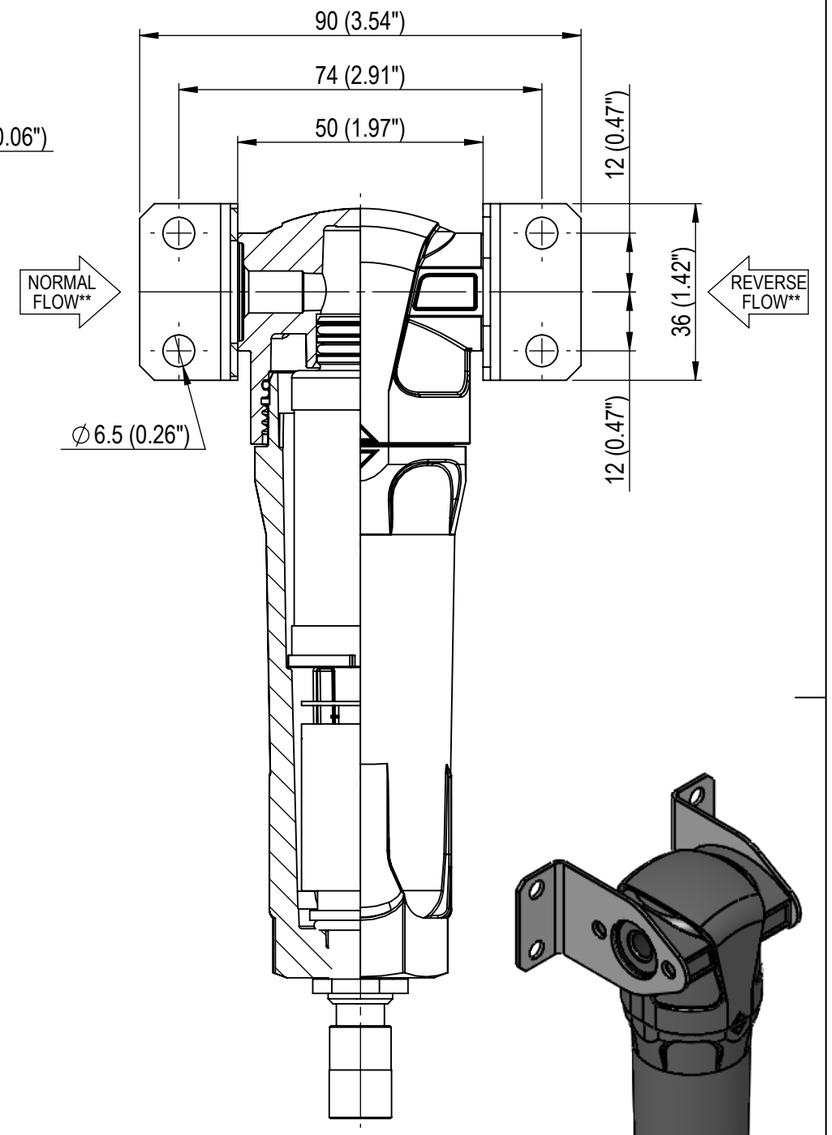

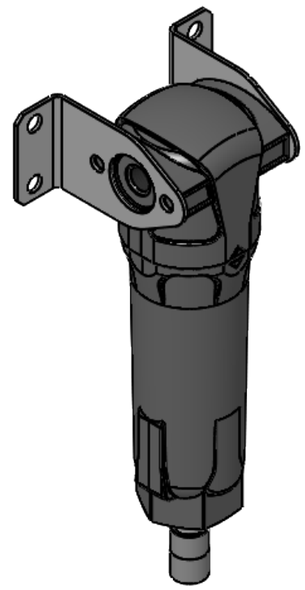

ISOMETRIC VIEW

DRAIN PORT TYPE:	MAX. ALLOWABLE WORKING PRESSURE:
AUTOMATIC	16 barg (232 psig)
MANUAL	20.7 barg (300 psig)

GENERAL PROPERTIES	
FILTER MODEL OPTIONS :	
Q_F-6	Q_F-15
PORT SIZE (A) VALID FOR G & NPT CONNECTIONS:	
⅛"	¼"
FLOW RATE:	
2.8 l/s (6 SCFM)	6.9 l/s (15 SFCM)

FILTER GRADE	FLOW DIRECTION	PARTICLE REMOVAL	MAX OIL CARRYOVER AT 20°C	MAX PARTICLE SIZE CLASS*	MAX OIL CONTENT CLASS*	PRESSURE LOSS - CLEAN & DRY	PRESSURE LOSS - SATURATED	MAX AIR INLET TEMP. WTH AUTOMATIC DRAIN	MAX AIR INLET TEMP. WITH MANUAL DRAIN	END CAP COLOUR
P	N	5µm	1mg/m³	4	3	50mbar (0.7psi)	80mbar (1.2psi)	80°C (176°F)	N/A	GRN
M	N	-	0.3mg/m³	-	3	55mbar (0.8psi)	125mbar (1.8psi)	80°C (176°F)	N/A	RED
C	N	-	0.01mg/m³	-	2	85mbar (1.2psi)	125mbar (1.8psi)	80°C (176°F)	N/A	BLU
A	N	-	0.003mg/m³	-	1	115mbar (1.7psi)	-	N/A	50°C (122°F)	BLK

* CLASS IN ACCORDANCE WITH ISO8573-1:2010
** FLOW DIRECTION VISUALLY INDICATED ON FILTER HOUSING

REV	CHANGE ORDER	DATE	BY

PROJECT REFERENCE			DRG SIZE A3
DESIGN REF			SCALE 1:2
CREATED BY IA	DATE 11.9.19	DRG. TITLE Q_F 6-15 FILTER SPECIFICATION	CHECK JL
REVISED BY IA	DATE 11.9.19	DRG. NUMBER A3- 42-1435 / MATERIAL N/A	REV A